Canadian Stroke Network
Réseau Canadien contre les accidents cérébrovasculaires

Networks of Centres of Excellence
Réseaux de centres d'excellence

Rehabilitation of Severe Strokes: Making the Tough Decisions

Robert Teasell MD FRCPC
Professor and Chair-Chief
Depart of Phys Med Rehab
Parkwood Hospital

St JOSEPH's HEALTH CARE LONDON

LHRI Lawson Health Research Institute

Western

Canadian Stroke Network
Réseau canadien contre les accidents cérébrovasculaires

Objectives

- **Understand the impact of stroke severity on rehabilitation**
- **Understand the role of rehabilitation in severe strokes**
- **Discuss the benefits and strategies for rehabilitation of more severe stroke patients**

Canadian Stroke Network
Réseau canadien contre les accidents cérébrovasculaires

Workshop Organization

- **The Issue with Severe Strokes**
- **3 Case Studies**
- **Stroke Rehabilitation Triage**
- **The Literature on Severe Strokes**
- **Severe Strokes Need a Different Rehabilitation Approach**

Canadian Stroke Network
Réseau canadien contre les accidents cérébrovasculaires

Rehab of Severe Strokes: The Challenge

- **Severe strokes constitute most disabled stroke patients and represent the greatest rehabilitation challenges**
- **Greatest cost to system due to increased LOS or frequent need for expensive long-term care**
- **Greatest need for rehab but often receive the least because perception of limited rehab gains**
- **Need to rethink the rehab goals of this group**

Ontario Stroke Rehab 2005/2006

- **16,068 strokes hospitalized to acute care 2005/2006**
- **2,293 died and 13,775 alive at discharge from acute care**
- **2,958 admitted to inpatient rehabilitation (21%) of all strokes discharged from acute care**
- **Mean FIM admission 78 (median 80)**
- **Mean FIM discharge 102 (median 109)**

Reality Check: Trends in Ontario

Variable	2003/2004	2005/2006
Stroke rehab admissions	2,863	2,958
Mean LOS	38.7 days	33.5 days
Total rehab bed days	110,798 bed days	99,093 bed days
Days from stroke onset to rehab admission	21.1 days	18.3 days
Admission FIM	75.3	77.7
LTC Admissions	2,248	3,043

Rehab of Severe Stroke: The Challenge

- In Ontario the number of stroke pts to rehab is remaining static, pts admitted to rehab sooner while FIM admission scores are rising
- Severe strokes are increasingly not admitted to rehab and the problem is getting worse
- In Ontario, approximately 3,000 strokes are sent directly to institutions without rehab
- Demographics and the limitations of acute and preventative care means the number of strokes will continue to increase

Should the More Severe Stroke Patient Be Rehabilitated?

Case Study 1

- 26 y.o. separated woman
- 3.5 wks ago sustained ruptured Rt MCA aneurysm 2 days post-partum
- Rt frontotemporal craniotomy and evacuation of hematoma
- Dense Lt hemiplegia, dysphagia, hypophonic voice, urinary retention, decreased sensation and neuropathic pain on Lt side, Lt homonymous hemianopsia and Terson's syndrome

Berg Balance	3/56
COVS	31/91
CMS Lt leg	3
CMS Lt foot	2
Postural Control	4
CMS Lt arm	1
CMS Lt hand	1

Case Study 2

- 46 y.o. married obese female
- Almost 2 mos previously hemorrhage involving Rt pons, midbrain and basal ganglia
- Resulting bilateral hemiparesis, Rt ataxia, dysphagia, dysarthria, bowel and bladder incontinence
- GJ tube and Foley catheter

Berg Balance	3/56
COVS	20/91
CMS Lt leg	3
CMS Rt leg	4
CMS Lt foot	3
CMS Rt foot	4
Postural Control	2
CMS Lt arm	2
CMS Lt hand	5
CMS Rt arm	3
CMS Rt hand	5
FIM	65

Case Study 3

- 87 y.o. widowed male lives alone
- 3 wks previously large Lt MCA infarct secondary to ICA occlusion
- Resulting Rt hemiplegia and expressive aphasia, apraxia, dysphagia with NG tube and history of CHF

Berg Balance	3/56
COVS	26/91
CMS Rt leg	2
CMS Rt foot	1
Postural Control	2
CMS Rt arm	1
CMS Rt hand	1

Case Studies: Who Would You Admit to Rehab?

Case 1: 26 yr single female with massive Rt ICH post-partum 3.5 weeks post-stroke

Case 2: 46 yr married obese female with massive subcortical and brainstem hemorrhage almost 2 months post-stroke

Case 3: 87 yr widowed male with large left MCA infarct 3 weeks post-stroke

What factors influenced your decision?

Factors Influencing Decision to Admit to Rehab Unit

- Stroke Severity
- Age
- Ability to participate and learn
- Family supports

Case Study 1

- 26 y.o. separated woman
- 3.5 wks ago sustained ruptured Rt MCA aneurysm 2 days post-partum
- Rt frontotemporal craniotomy and evacuation of hematoma
- Dense Lt hemiplegia, dysphagia, hypophonic voice, urinary retention, decreased sensation and neuropathic pain on Lt side, Lt homonymous hemianopsia and Terson's syndrome

Berg Balance	3/56
COVS	31/91
CMS Lt leg	3
CMS Lt foot	2
Postural Control	4
CMS Lt arm	1
CMS Lt hand	1

Case 1

- Transferred to Stroke Rehab Unit 3.5 weeks post stroke and discharged almost 4 months later

	Admission	Discharge
Berg Balance	3/56	45/56
COVS	31/91	63/91
CMS Lt leg	3	5
CMS Lt foot	2	3
Postural Control	4	5
CMS Lt arm	1	2
CMS Lt hand	1	2

Case 1

- Sensation on Lt side severely impaired
- Able to transfer w/c to bed independently +/- hand support, using a standing pivot transfer
- Ambulating 60 meters with single cane and supervision
- Propel wheelchair up to 50 meters
- Manage full flight of stairs with handrail and supervision
- Left neglect and vision interfered with higher level IADLs

Case 1

- Went to live with her parents
- Stroke Rehab Pilot OP Program for 11 months
- Cerebral angiogram showed a small AVM during that time and underwent resection of AVM
- Began teaching piano, got a part-time retail job and moved into her own home less than 2 years post event with her young son

Stroke Rehabilitation Triage

- Traditionally stroke rehabilitation units have confined admissions to the "middle band" of stroke patients
- "Lower band" of stroke patients remain the most expensive element of system

Middle Band (Moderate)

- Moderate deficits
- Conscious with significant hemiparesis
- Early FIM 40-80 or motor FIM 38-62
- Marked gains in rehab and 85% discharged to community

Lower Band (Severe Strokes)

- Severe deficits
- Unconscious at onset with severe paresis or serious medical comorbidity
- Early FIM < 40 or motor FIM < 37
- Slower improvement, unlikely to achieve functional independence (unless young) and smallest likelihood of community discharge

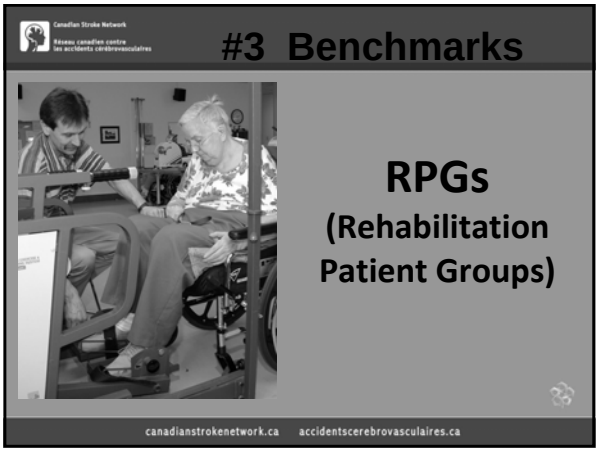

RPGs

- 2004 MOHLTC assembled the Ontario Joint Policy and Planning Committee (JPPC)
- Mandate to evaluate FIM-based groupings to reflect Ontario in-patient rehabilitation costs
- Similar patient groups have been established internationally and have been used for prospective payment systems
- Allows development of benchmarks

Anticipated Length of Stay: RPGs

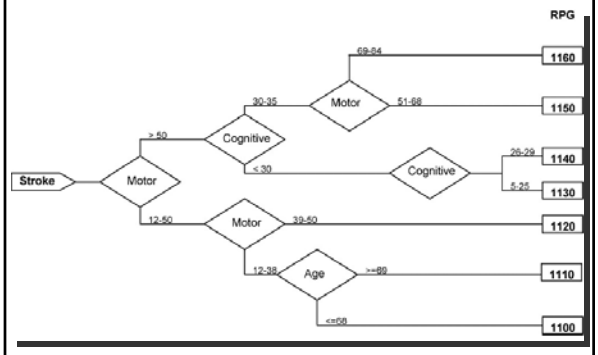

RPGs Parkwood Hospital (April 05-March 08) n=639 stroke rehabilitation patients

	RPG	LOS	% Discharged Home
Mild	1160 n=67	17.3 days	100%
	1150 n=51	26.7 days	92.2%
Moderate	1140 n=103	24.3 days	84.5%
	1130 n=87	32.1 days	82.8%
	1120 n=103	38.7 days	79.6%
Severe	1110 n=136	46.4 days	34.6%
	1100 n=92	59.0 days	70.7%

RPGs will allow comparison between sites and eventually will dictate funding.

Larger Strokes Have Less Potential for Neurorecovery

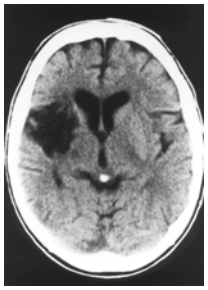

Rehabilitation of Severe Strokes

- Cortical reorganization is dependent on adjacent or connected cortical areas taking over lost function
- Given extent of brain damage in severe strokes, pts typically severely compromised for cortical reorganization and neurological recovery

Size of Lesion Influences Recovery

Recovery post-stroke dependent upon reorganization of remaining cortex

- Recovery of smaller strokes due to reorganization of adjacent cortex; recovery relatively rapid and complete
- Recovery of larger strokes proceeds much slower and is less complete – greater reliance on more distant cortical regions

Stroke Severity Predicts Rehab Outcomes

- Best predictor of stroke outcome is initial clinical assessment of stroke severity
- Correlates with the length of time to maximal neurological and functional recovery

Probability of Walking ≥ 150 ft Without Assistance

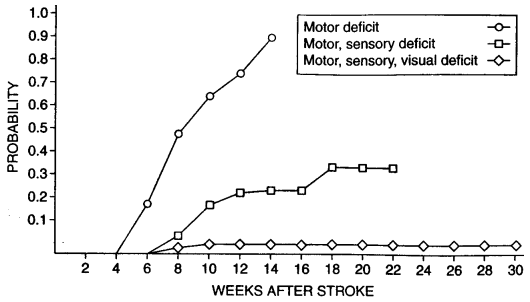

Rehab of Severe Strokes

Several RCTs comparing specialized stroke rehab to generalized stroke rehab for severe stroke subsets more likely:

- *Be discharged home*
- *Shorter length of hospital stay*
- *Reduced mortality*
- *Minimal functional gains*

Concept of slow-stream stroke rehab remains unproven

Kalra and Eade 1995

Randomized 76 stroke patients with a poor prognosis on the Orpington Prognostic score (<5)

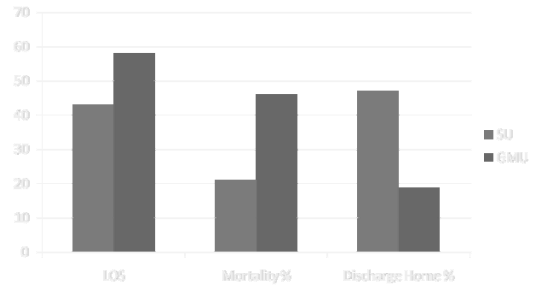

Jorgensen et al. (2000)

- Comparative trial
- N = 1241 consecutive stroke patients
- Group 1 (n = 305) - general and neurological wards
- Group 2 (n = 936) - single stroke unit
- Patients similar in two groups
- *88% of all strokes* admitted to hospital

Jørgensen et al. (2000)

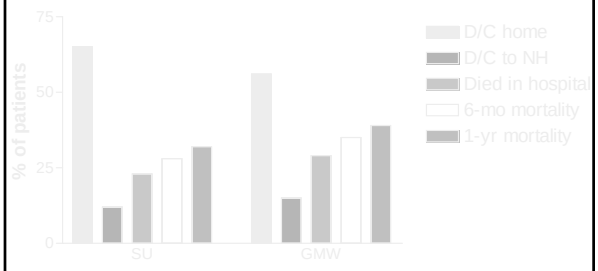

A follow-up study revealed reduced mortality at 5 years.

Jorgensen et al. (2000)

- Relative risks of *poor outcome* (mortality or nursing home discharge) *reduced* by *47%* on stroke unit
- For *severe strokes* poor outcome *reduced* by *86%*; relative risk of *1 and 5 year mortality reduced* by *40%* and *70%*
- Authors attributed it to an interdisciplinary rehab approach

The Parkwood Experience: Rehab of Severe Stroke

- 1996 developed a 10 bed rehab unit for severe strokes not admitted to typical stroke rehab unit
- Jan 1, 1996 to Dec 31, 2001 admitted 239 pts
- Excluded 24 pts admitted > 6 mos post stroke and a further 19 patients who were ambulatory, with primarily cognitive and perceptual deficits
- 196 non-ambulatory stroke pts admitted to stroke rehab unit

Parkwood Hosp: Severe Stroke Rehabilitation

- 92 females and 104 males
- Mean age 72 ± 11 yrs
- 105 (53.6%) Rt hemispheric, 78 (39.8%) Lt hemispheric, 13 (6.6%) brainstem strokes
- 166 (85%) ischemic, 30 (15%) hemorrhagic
- Only 3 (1.4%) admitted from other acute rehab units
- Program staffed PT, OT, SLP, rehab therapist, SW, rec therapist, ½ dietician

Parkwood Hosp Severe Stroke Rehab

- 196 nonambulatory stroke pts, 56 days post-stroke with mean FIM score of 46
- Full rehab program for mean of 88 days
- FIM gain was 24 - FIM efficiency score = .27
- 43% were able to be discharged home
- Goal more likely discharge home
- Less likely to make functional improvement

Severe Stroke Patients Require a Different Rehab Strategy

- Unlikely to achieve significant functional gains with traditional rehabilitation approach
- Need to change the focus which is now limiting complications and discharging home
- Supportive family and resources become critical
- Little benefit to rehabilitating elderly severe stroke patient with no family supports
- Little support for slow-stream concept

Case Study 2

- 46 y.o. married female
- Oct 21, 2003 hemorrhage involving Rt pons, midbrain and basal ganglia
- Resulting bilateral hemiparesis, Rt ataxia, dysphagia, dysarthria, bowel and bladder incontinence
- Admitted to Parkwood Stroke Rehab Unit
- Kept in hospital Dec 16, 2003 – June 4, 2004

Berg Balance	3/56
COVS	20/91
CMS Lt leg	3
CMS Rt leg	4
CMS Lt foot	3
CMS Rt foot	4
Postural Control	2
CMS Lt arm	2
CMS Lt hand	5
CMS Rt arm	3
CMS Rt hand	5
FIM	65

Case Study 2

	Admission	Discharge
Berg Balance	3/56	5/56
COVS	20/91	43/91
CMS Lt leg	3	4
CMS Rt leg	4	5
CMS Lt foot	3	4
CMS Rt foot	4	5
Postural Control	2	4

Case Study 2

	Admission	Discharge
CMS Lt arm	2	3
CMS Lt hand	5	5
CMS Rt arm	3	3
CMS Rt hand	5	6

Case Study 2

- At discharge pt. required moderate to maximum assistance with all ADLs due to ataxia, hemiparesis and limited shoulder movement
- Dysphagia with G-J tube eventually removed at time of discharge and on minced diet
- Required one to two person transfer
- Ambulating 10 meters with moderate assistance and cueing
- Discharged home with strong family, private insurance and Home Care support

Case Study 2

- Pilot Study (interdisciplinary outpatient therapy): June 23 – Sept 23, 2004
- COVS 34 to 46; Berg 5 to 7
- Comprehensive Outpatient Rehab Program (CORP): Oct 12, 2004 – March 10, 2005

	Admission	Discharge
FIM (/126)	65	69
CMS Lt U/E Arm/Hand	3/6	3/6
CMS Rt U/E Arm/Hand	4/6	5/6
COVS (/91)	27	38
Berg Balance	6	7

Case Study 2

- CORP readmit Nov 15, 2005 – Jan 27, 2006
- Berg Balance 12/56; COVS 48/91
- Feb 6, 2006 to March 14, 2006 admitted to hospital for AVM removal
- Rehab March 14 – April 12, 2006 for deconditioning

	Admission	Discharge
CMS Lt leg	3/6	3/6
CMS Lt foot	4/6	5/6
COVS (/91)	35	37
Berg Balance	4	4

Costs in Case 2 up until AVM Surgery

Elements of Care	Cost
Inpatient Rehab	200 days x $500/day = $100,000
Outpatient Therapy	10 months x $800/mos = $8,000
Home Care Support to Date	$1000/mos x 32 mos = $32,000
Total Costs of Rehab and Home Support	$140,000
Cost of Long-term Care and 1 month waitlist	$142,500 ($45,000/yr x 3.17 yrs) + $22,500 ($750/day x 30 days) = $165,000

Save >$30,000 per annum for each continuing year alive

Case Study 3

- 87 y.o. widowed male lives alone
- 3 wks previously large Lt MCA infarct secondary to ICA occlusion
- Resulting Rt hemiplegia and expressive aphasia, apraxia, dysphagia with NG tube and history of CHF

Berg Balance	3/56
COVS	26/91
CMS Rt leg	2
CMS Rt foot	1
Postural Control	2
CMS Rt arm	1
CMS Rt hand	1

Canadian Stroke Network
Réseau canadien contre les accidents cérébrovasculaires

Conclusions

- Rehab of severe strokes: improve at slower pace and not to same degree
- Realistic goals are modest improvement in function, reduction in mortality and improved chance of discharge home
- Investment is substantial but cost-savings and improved quality of life for well selected patients is substantial

Canadian Stroke Network
Réseau canadien contre les accidents cérébrovasculaires

The End

canadianstrokenetwork.ca accidentscerebrovasculaires.ca